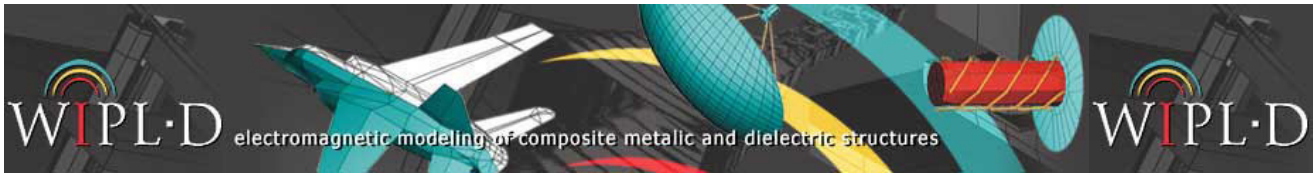

Electromagnetic Compatibility

Electromagnetic (EM) environment is an integral part of the world in which we live. Many systems (radio, TV broadcasting stations, radars…) radiate EM energy during their common operation modes. The EM environment created by these intentional and unintentional sources, when sufficiently strong, interferes with the operation of many electrical and electronics equipment. During the past few decades electrical and electronics engineering have rapidly advanced so EM noise has increased but the techniques to solve the problems caused by EM noise have improved.

EMC is a very important area of electromagnetics and EM measurements are used extensively. Behavior of every new product in EM field must be thoroughly checked using measurement equipment before being released to public. That's why majority of EMC engineers and specialists rely only on measurements. However, accurate EM simulation software can help early on in the design cycle in order to predict EMC problems and prevent them.

The aim of this document is to demonstrate the application of WIPL-D software to many EMC issues.

EM Field In the Vicinity of a Transmission Line

Great variety of transmission lines are used today. They are used in high-power voltage transmission as well as in low-power – high-frequency devices. Transmission lines are sources of electric and magnetic fields in their vicinity. Some power transmission lines usually carry voltages higher than 100 kV and currents higher than 100 A. High electric field, occurring in that case, is specially investigated in terms of its influence on humans.

Transmission line, shown in Fig. 1, is modeled using several wires and analyzed in WIPL-D Pro. The line is fed by an ideal voltage generator and it's terminated with a 50 Ohms resistor. Obtained results are electric and magnetic fields in the vicinity of the transmission line (Fig. 2).

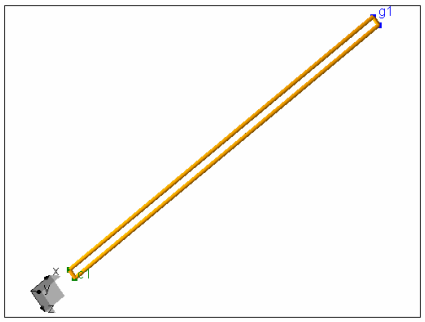

Figure 1. Transmission line model

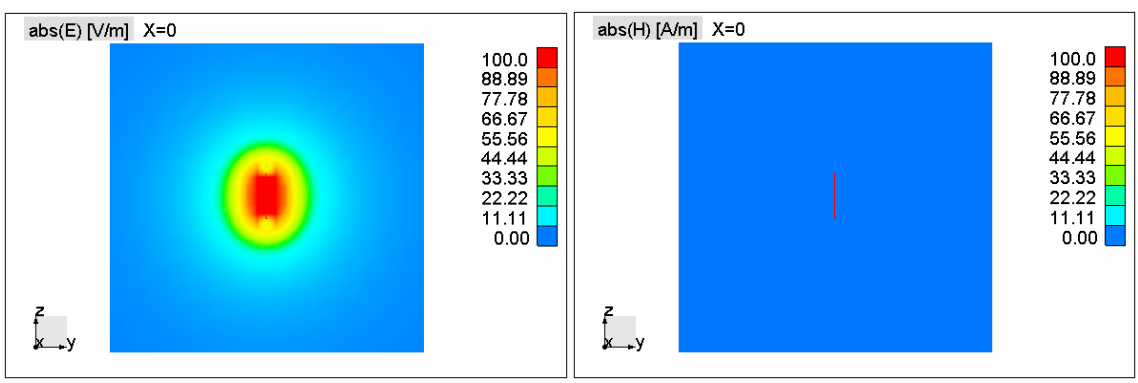

Figure 2. Electric and magnetic fields

Waveguide Resonator

Rectangular waveguides were one of the earliest types of structures used to transport microwave signals and still are used for many applications usually when high microwave power is needed.

Waveguide resonators are usually short circuited at both ends, forming a closed box cavity. Here, electric and magnetic field are stored within the cavity. In practice, EM energy is, then, dissipated in the metallic walls of the cavity, or (and) dielectric filled cavity.

Rectangular waveguide is modeled and simulated in WIPL-D Pro (Fig 3). Excitation is point source generator, that practically excites only a TE10 wave. The observed results are current distribution on waveguide walls (Fig. 4) and electric and magnetic fields in the waveguide (Fig. 5). Metallic walls forming the cavity are made of ideal perfectly conducting plates.

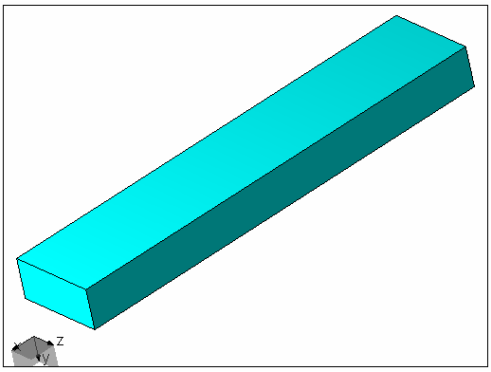

Figure 3. Waveguide resonator

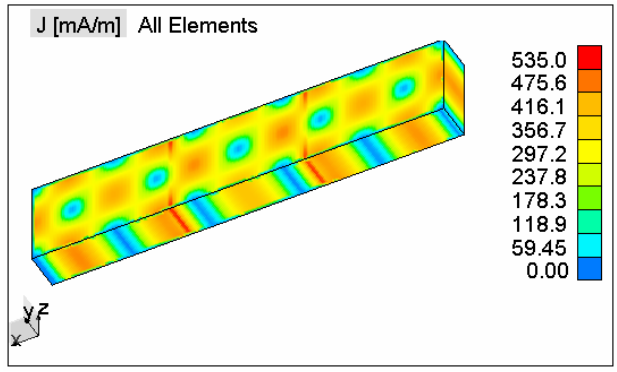

Figure 4. Current distribution on walls of the waveguide resonator

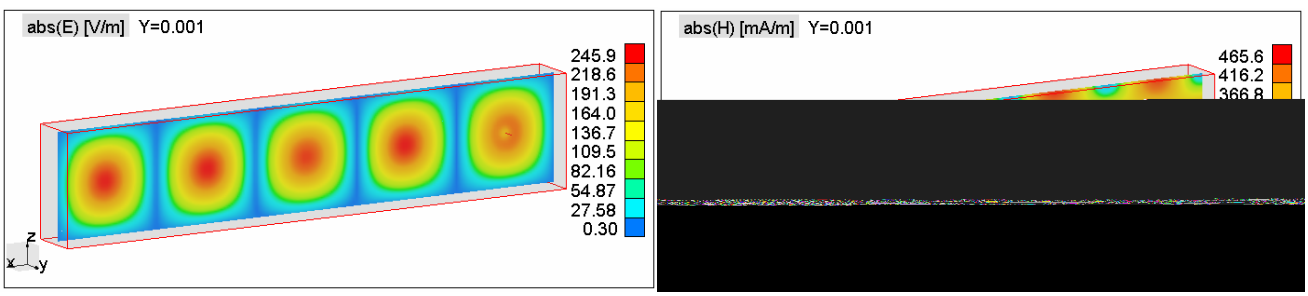

Figure 5. Electric and magnetic field in waveguide resonator

Wire in Cavity

Undesired coupling of EM energy from one system (emitter) to another (receptor) is EM interference. Let's consider a specific case of coupling – radiation coupling. Radiation coupling between an emitter and receptor results from a transfer of EM energy through the radiation path.

EM shielding is the technique that reduces coupling of undesired radiated EM energy into equipment to enable it to operate compatibly in its EM environment. Shielding problems are difficult to handle when a perfect shielding integrity is not possible because of presence of intentional discontinuities in shielding walls, such as shielding panel joints, ventilation holes, visual access windows or switches.

A wire with 50 Ohms resistor and a finite ground plane are placed in a cavity with a hole at one of the walls. A simple model of the system is modeled in WIPL-D Pro (Fig. 6). Results of interests are current on the wire and the electric field in the cavity. We can see peaks at cavity resonant frequencies on the current vs. frequency and field vs. frequency graphs (Figs 7-8).

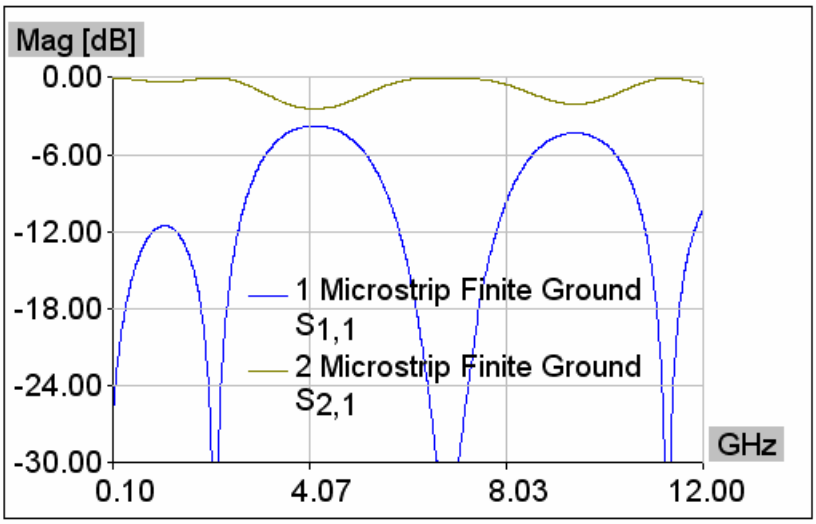

Figure 10. S parameters of microstrip transmission line

Microstrip with finite ground plane and slot into the ground which is perpendicular to microstrip transmission line, is modeled in WIPL-D (Fig. 11). Results of interest are s parameters (Fig. 12).

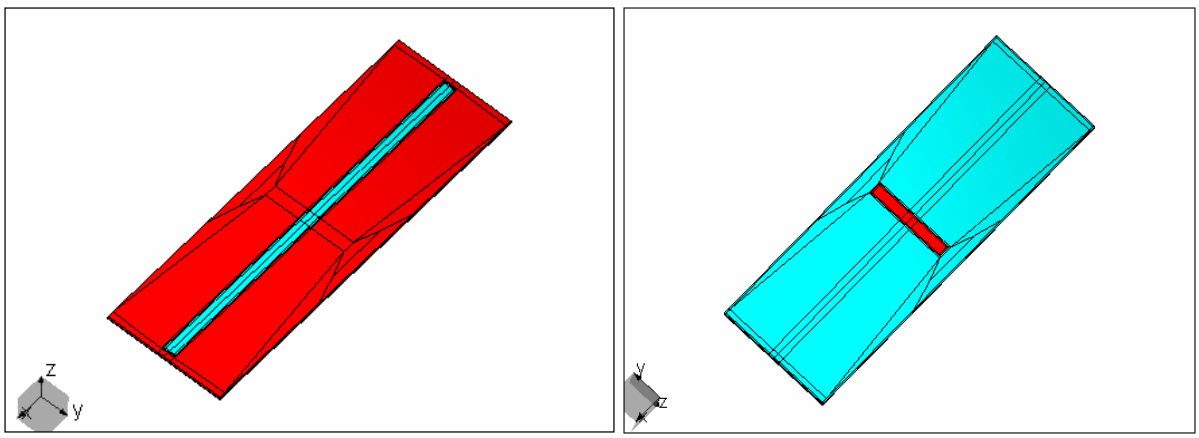

Figure 11. Microstrip line; top and bottom view

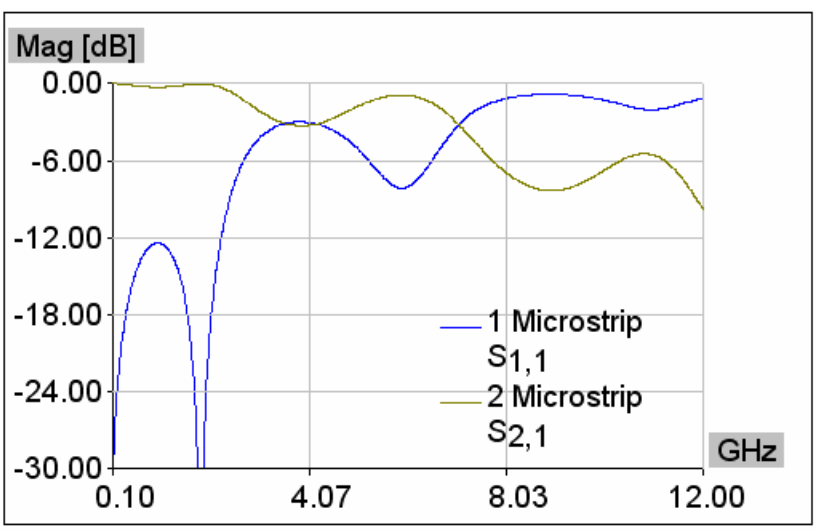

Figure 12. S parameters of microstrip transmission line

Printed Circuit

Printed circuits are used to mechanically support and electrically connect electronic components. They are usually multilayered structures where spaces between traces and ground planes are filled with dielectric. In the past few decades, printed circuits have become an important part of almost every electronic system.

A printed circuit with a generator at one side and a load on the other side is modeled and simulated in WIPL-D Pro (Fig. 13). Two ground planes are under printed trace (one is standard ground plane while another is placed for DC (Fig. 14). Traces are very thin (Fig. 14). Near field is calculated and shown for 8.035 GHz frequency (Fig. 15).

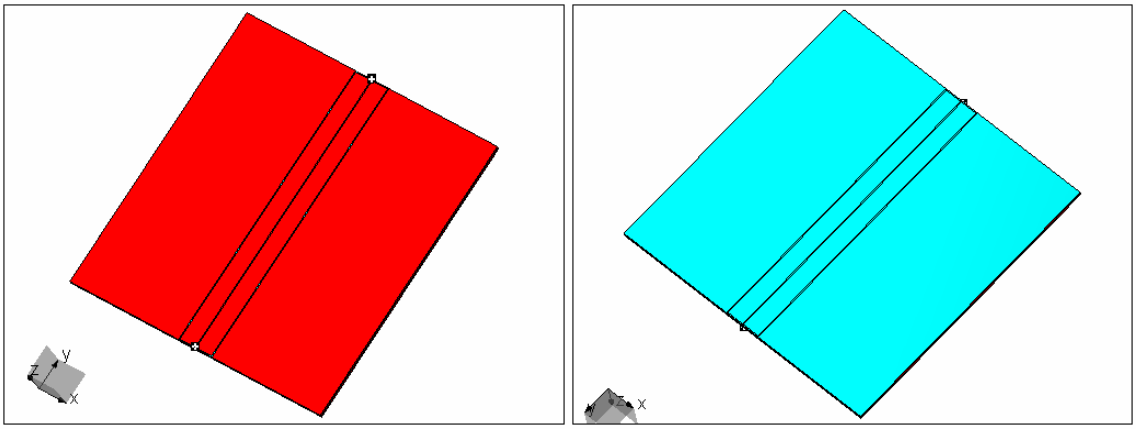

Figure 13. Printed circuit; top and bottom view

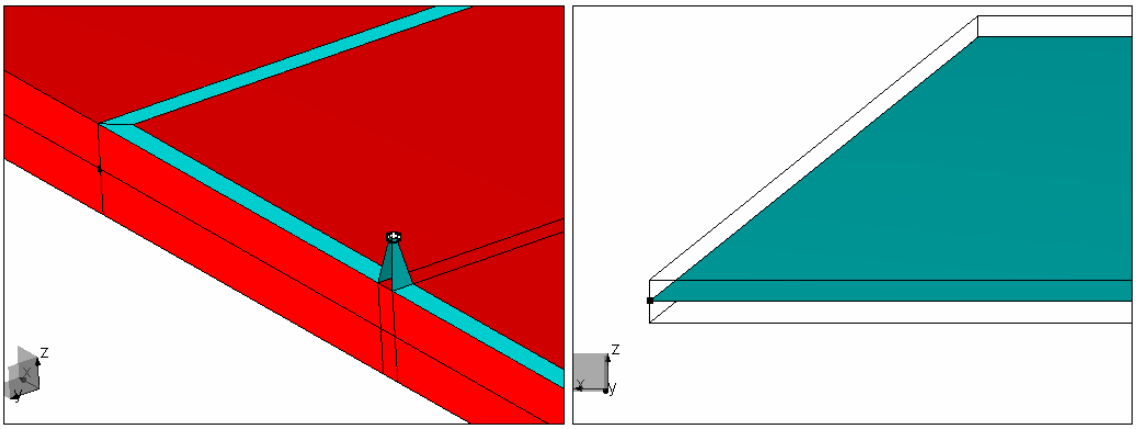

Figure 14. Printed circuit–line and 2nd metallic layer

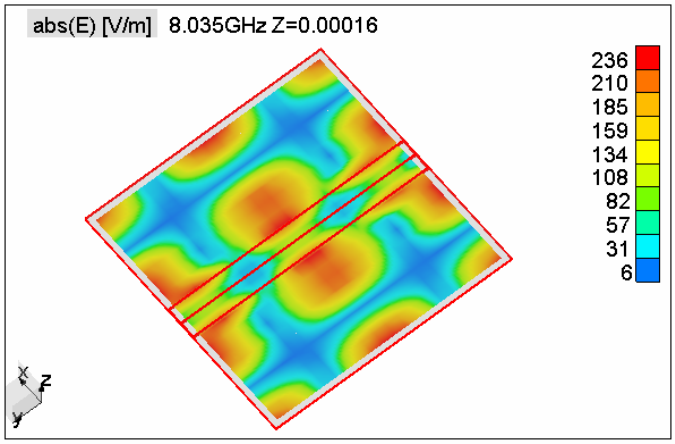

Figure 15. Electric field near printed circuit